7

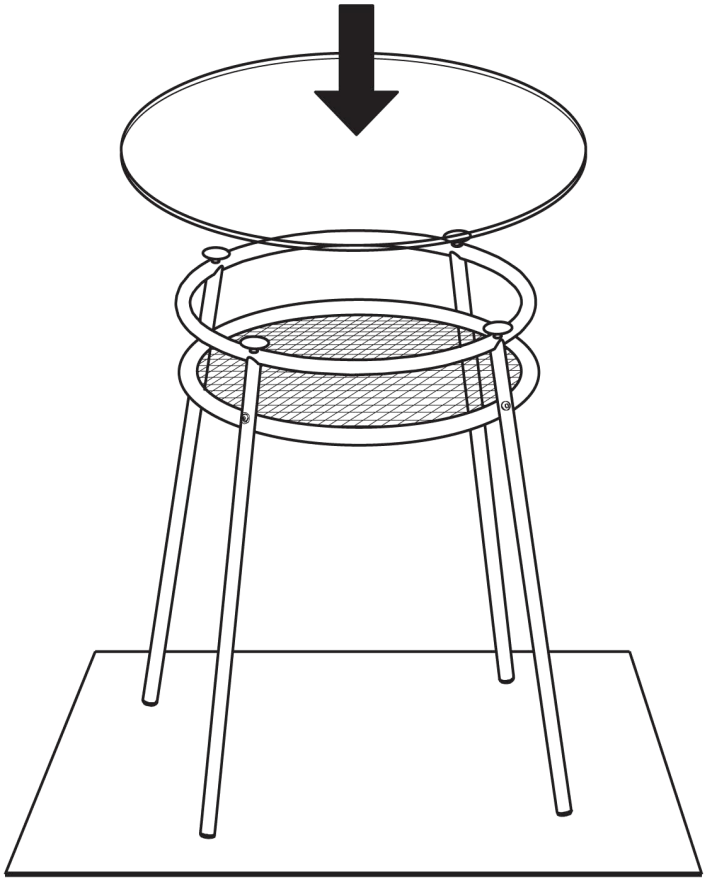

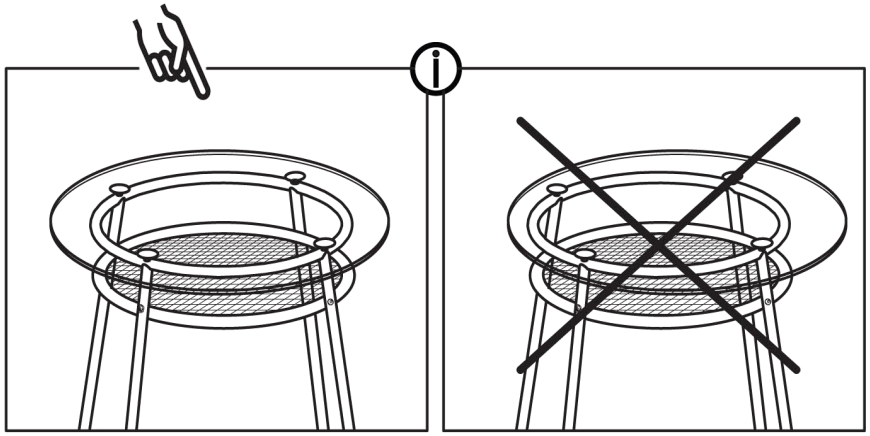

ALLSTA

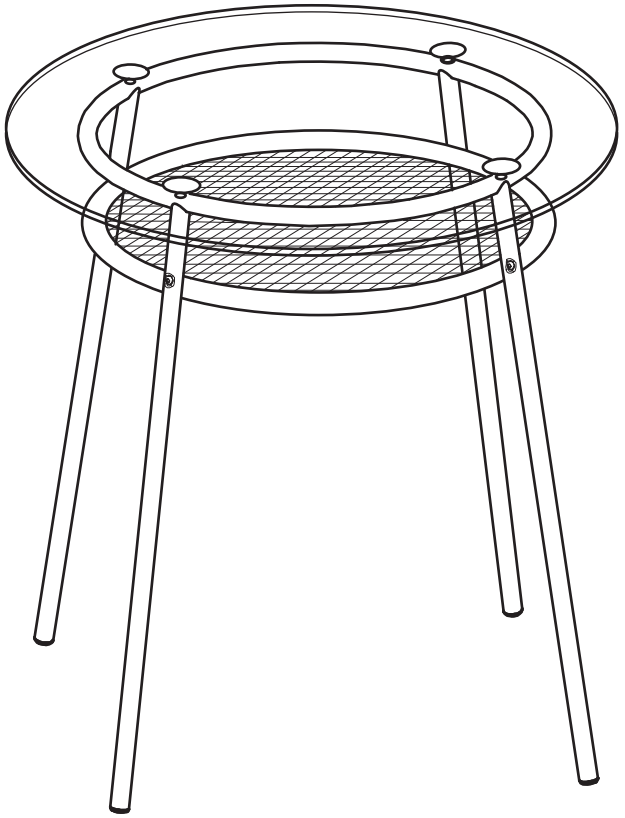

© Inter IKEA Systems B.V. 2016

AA-2010751-2

IKEA®
Design and Quality
IKEA of Sweden

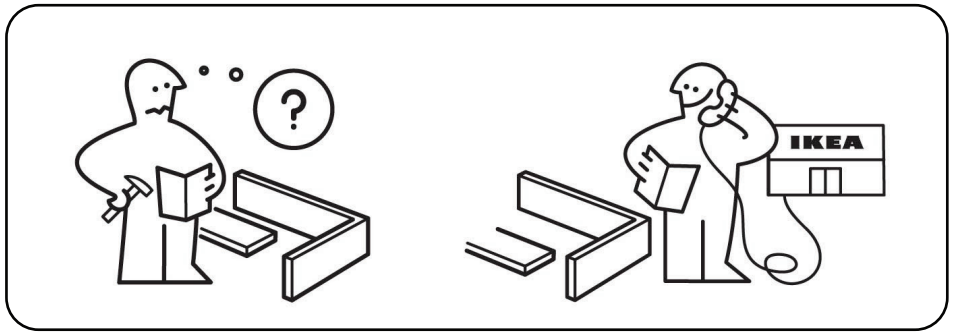

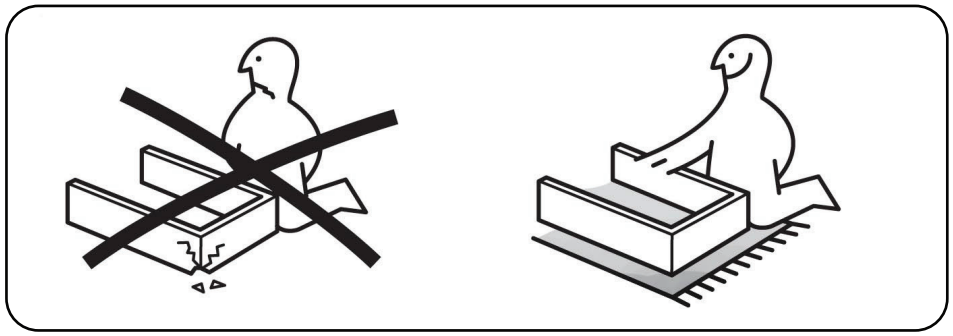

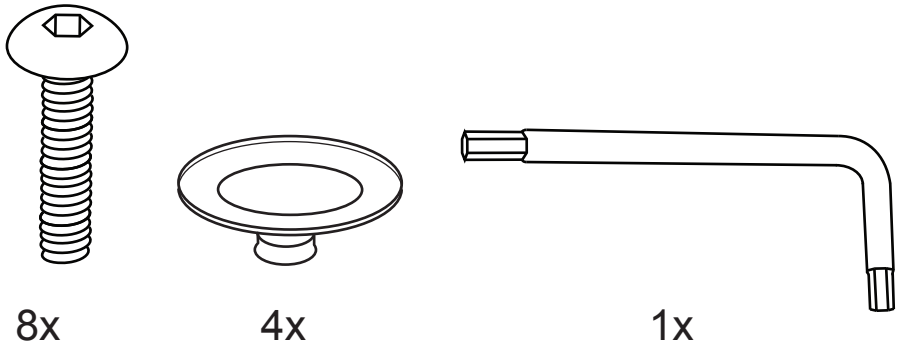

8x 4x 1x

5

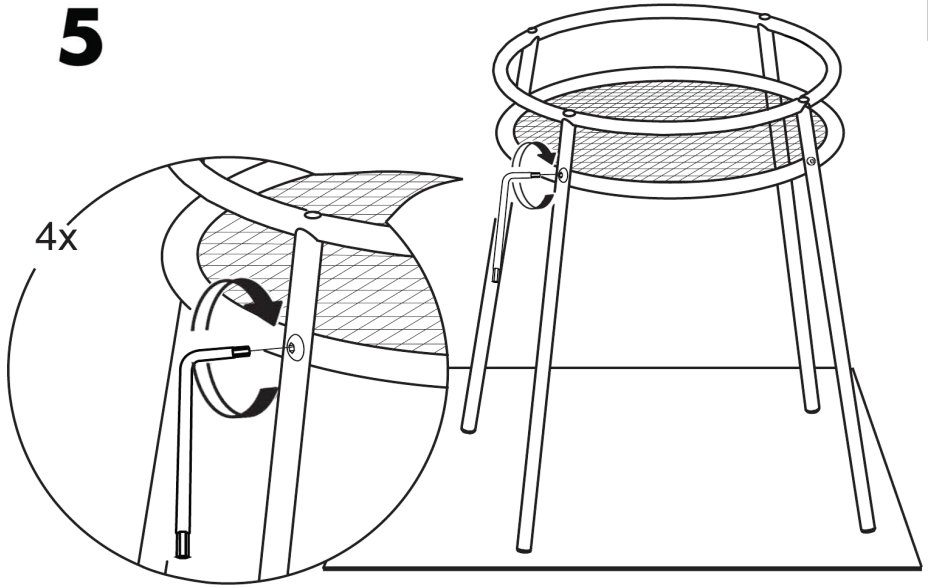

6

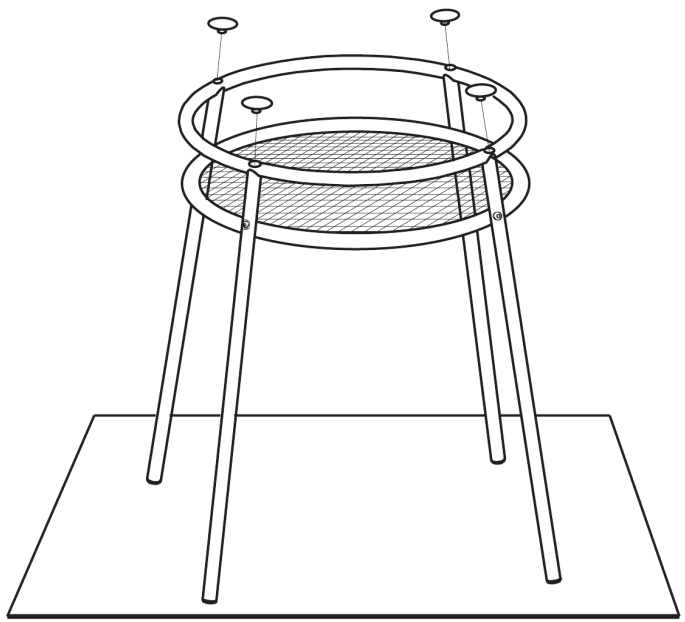

4

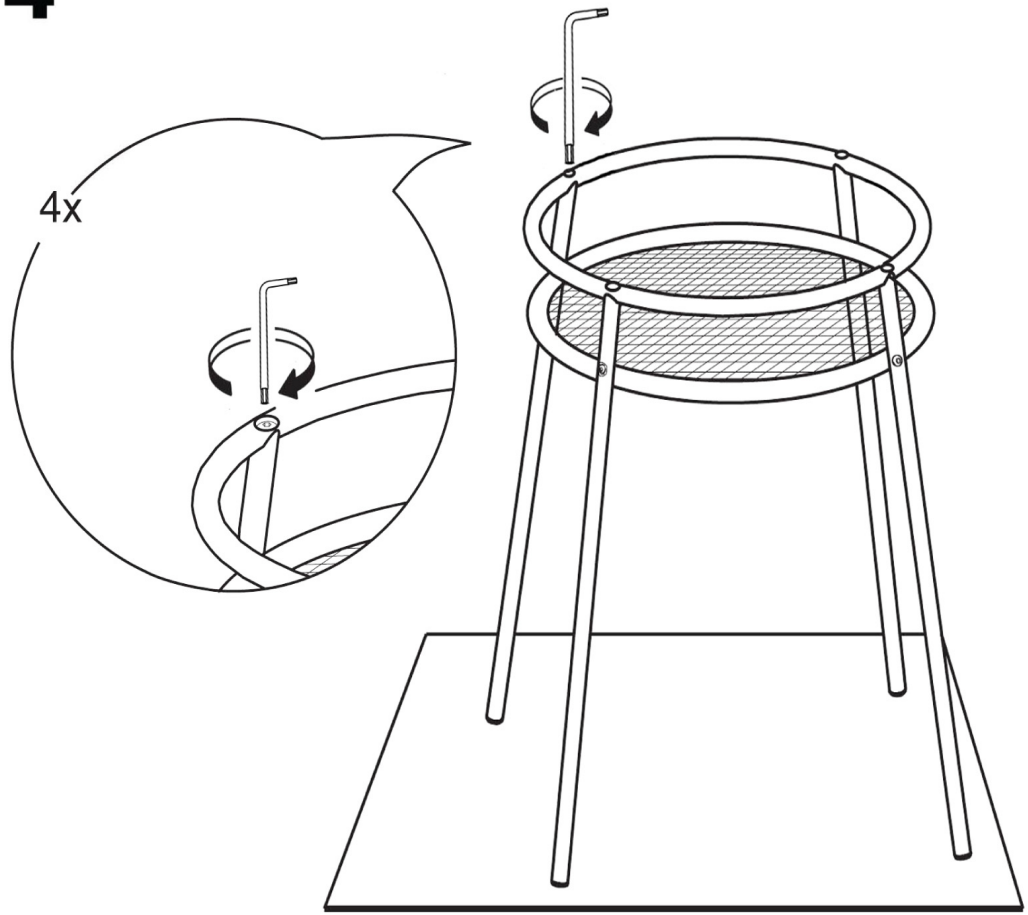

1

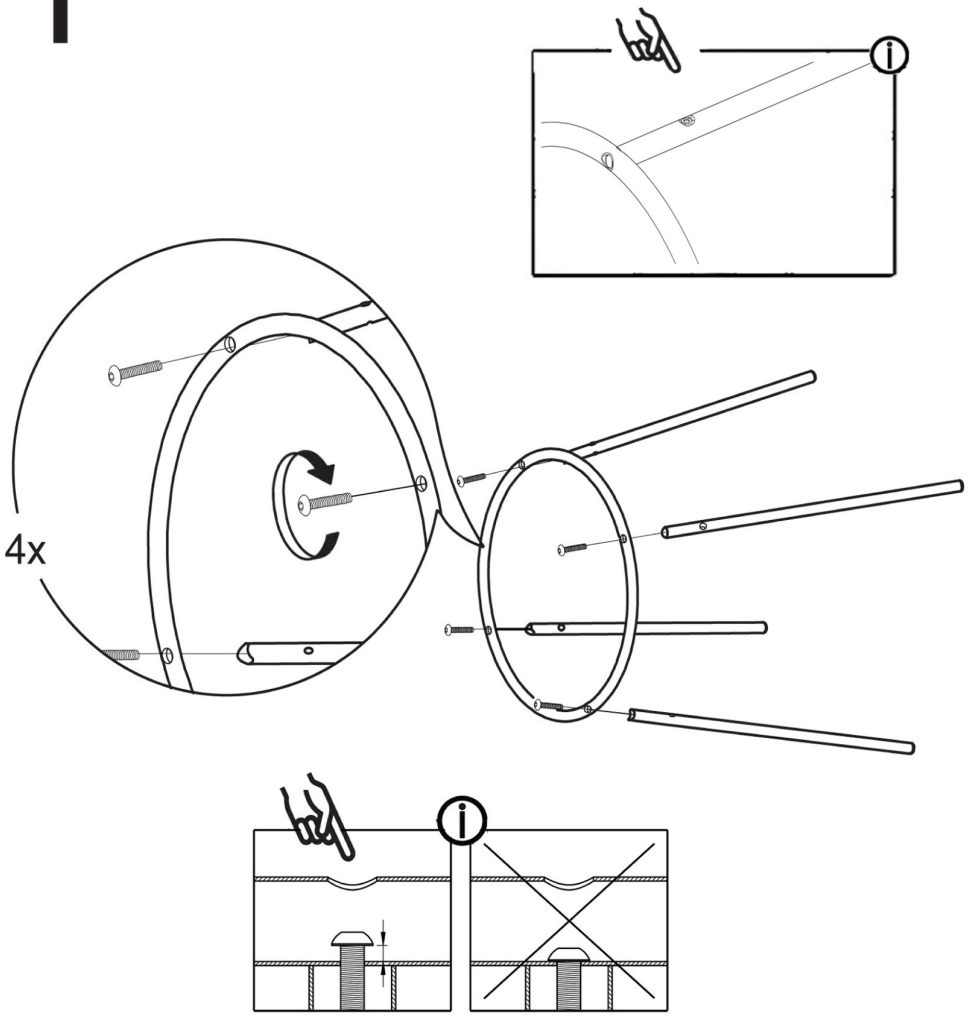

2

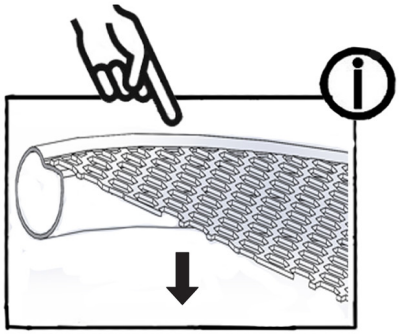

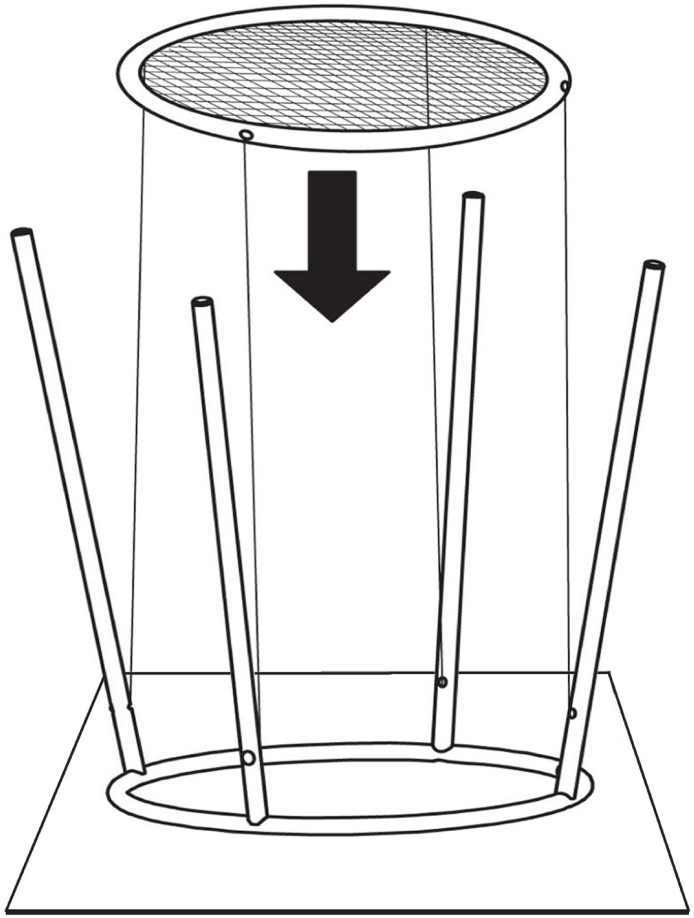
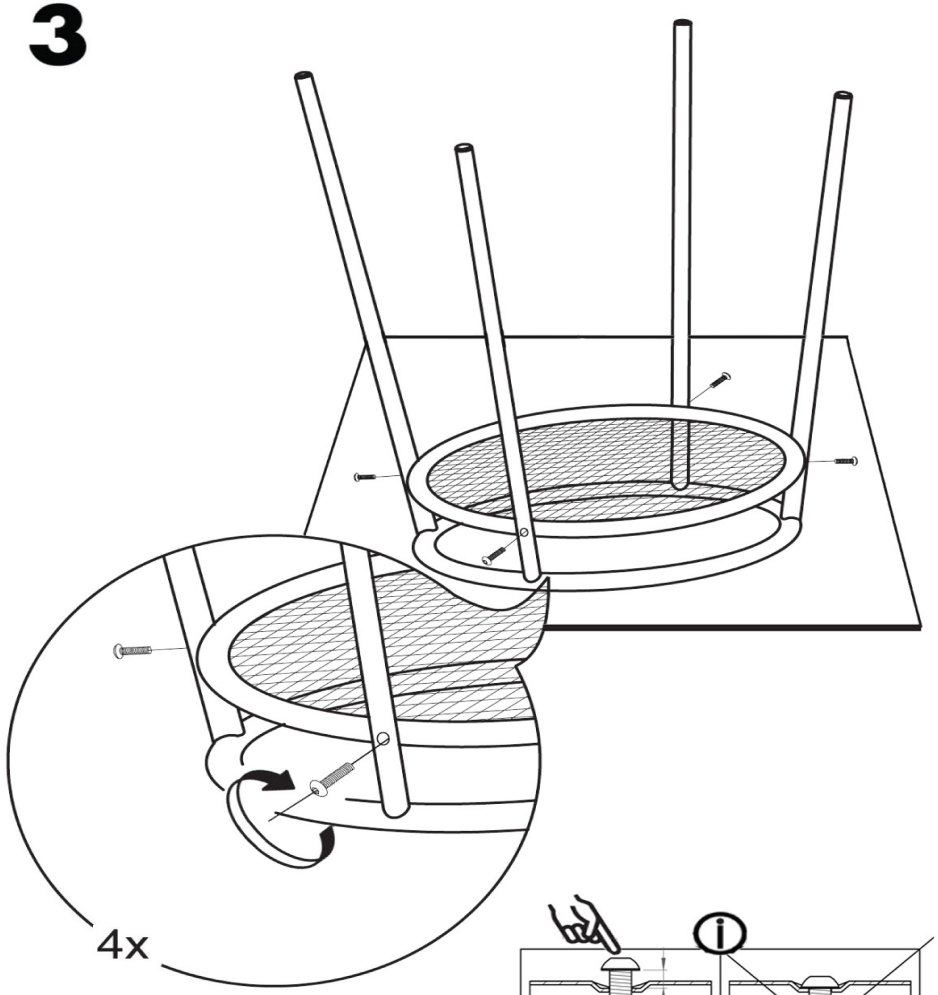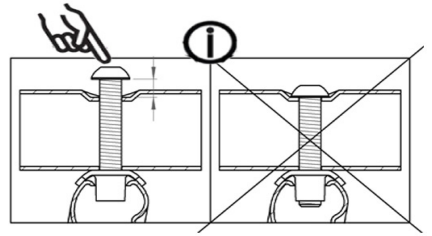
3